SG-0001

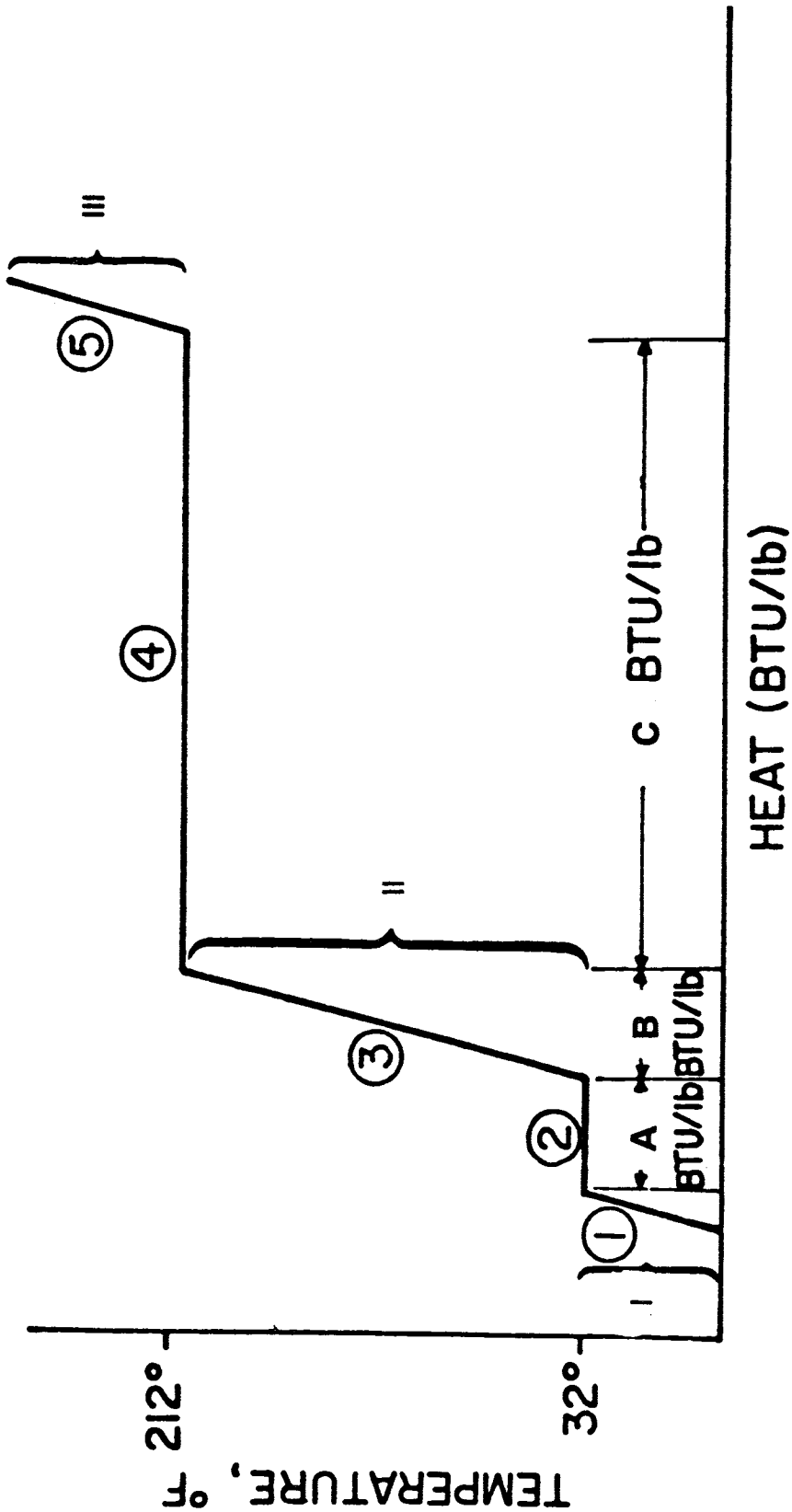
212°
32°
TEMPERATURE, °F
HEAT (BTU/lb)
A BTU/lb
B BTU/lb
C BTU/lb
I
II
III
1
2
3
4
5

SG-0002

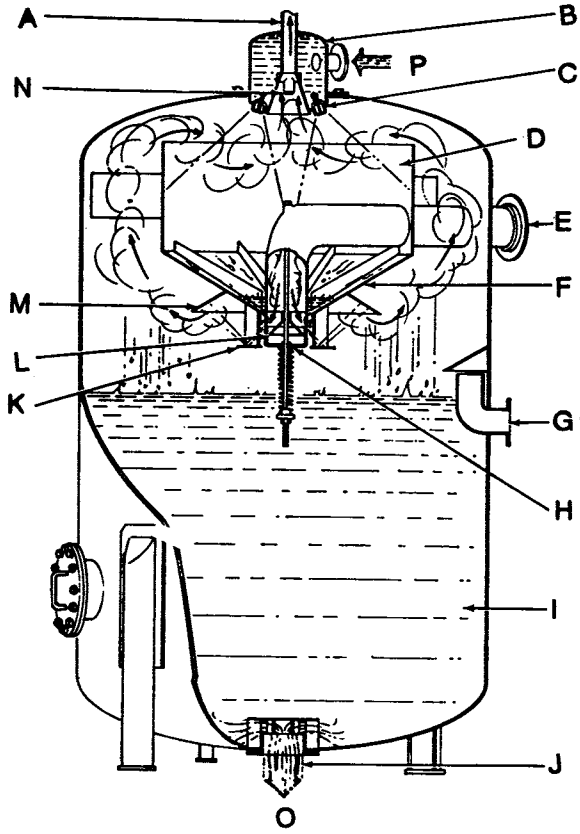

SG-0003

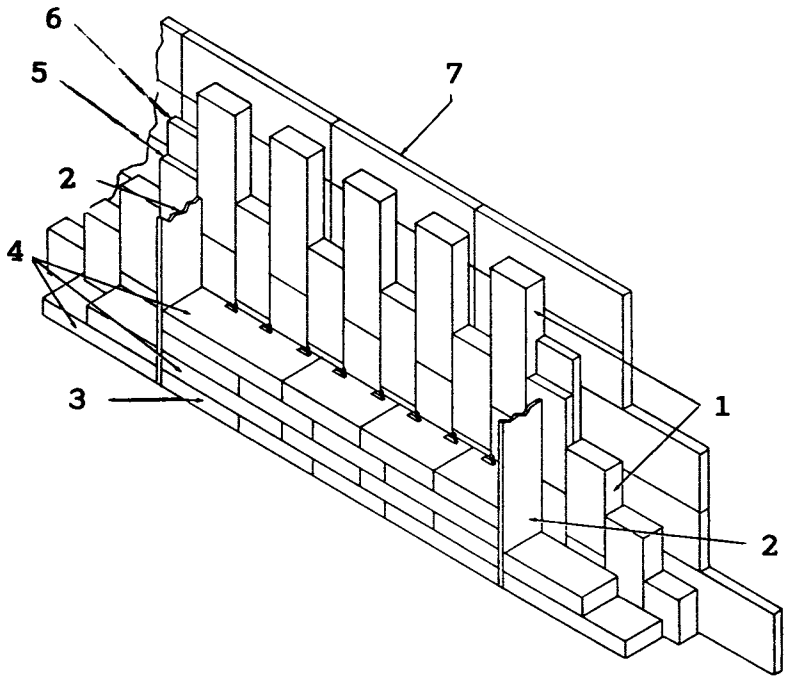

Table 1. Saturation, Temperatures

Temp, °F	Abs press, psi	Specific vol		Enthalpy (heat)		
		Sat liquid	Sat vapor	Sat liquid	Evap	Sat vapor
32	0.08859	0.01602	3304.7	0.01	1075.5	1075.5
40	0.12170	0.01602	2444	8.05	1071.3	1079.3
50	0.17811	0.01603	1703.2	18.07	1065.6	1083.7
60	0.2563	0.01604	1206.7	28.06	1059.9	1088.0
70	0.3631	0.01606	867.9	38.04	1054.3	1092.3
80	0.5069	0.01608	633.1	43.02	1048.6	1096.6
90	0.6982	0.01610	468.0	57.99	1042.9	1100.9
100	0.9492	0.01613	350.4	67.97	1037.2	1105.2
110	1.2748	0.01617	265.4	77.94	1031.6	1109.5
120	1.6924	0.01620	203.27	87.92	1025.8	1113.7
130	2.2225	0.01625	157.34	97.90	1020.0	1117.9
140	2.8886	0.01629	123.01	107.9	1014.1	1122.0
150	3.718	0.01634	97.07	117.9	1008.2	1126.1
160	4.741	0.01639	77.29	127.9	1002.3	1130.2
170	5.992	0.01645	62.06	137.9	996.3	1134.2
180	7.510	0.01651	50.23	147.9	990.2	1138.1
190	9.339	0.01657	40.96	157.9	984.1	1142.0
200	11.526	0.01663	33.64	168.0	977.9	1145.9
212	14.696	0.01672	26.80	180.0	970.4	1150.4
220	17.186	0.01677	23.15	188.1	965.2	1153.4
240	24.969	0.01692	16.323	208.3	952.2	1160.5
280	49.203	0.01726	8.645	249.1	924.7	1173.8
300	67.013	0.01745	6.466	269.6	910.1	1179.7
340	118.01	0.01787	3.788	311.1	879.0	1190.1
380	195.77	0.01836	2.335	353.5	844.6	1198.1
400	247.31	0.01864	1.8633	375.0	826.0	1201.0

Table 2. Saturation, Pressures

Abs press, psi	Temp, °F	Specific vol		Enthalpy (heat)		
		Sat liquid	Sat vapor	Sat liquid	Evap	Sat vapor
0.50	79.58	0.01608	641.4	47.6	1048.8	1096.4
1.0	101.74	0.01614	333.6	69.7	1036.3	1106.0
5.0	162.24	0.01640	73.52	130.1	1001.0	1131.1
10	193.21	0.01659	38.42	161.2	982.1	1143.3
14.7	212.00	0.01672	26.80	180.0	970.4	1150.4
15	213.03	0.01672	26.29	181.1	969.7	1150.8
20	227.96	0.01683	20.089	196.2	960.1	1156.3
25	240.07	0.01692	16.303	208.5	952.1	1160.6
30	250.33	0.01701	13.746	218.8	945.3	1164.1
40	267.25	0.01715	10.498	236.0	933.7	1169.7
50	281.01	0.01727	8.515	250.1	924.0	1174.1
60	292.71	0.01738	7.175	262.1	915.5	1177.6
70	302.92	0.01748	6.206	272.6	907.9	1180.6
80	312.03	0.01757	5.472	282.0	901.1	1183.1
90	320.27	0.01766	4.896	290.6	894.7	1185.3
100	327.81	0.01774	4.432	298.4	888.8	1187.2
110	334.77	0.01782	4.049	305.7	883.2	1188.9
120	341.25	0.01789	3.728	312.4	877.9	1190.4
130	347.32	0.01796	3.455	318.8	872.9	1191.7
140	353.02	0.01802	3.220	324.8	868.2	1193.0
150	358.42	0.01809	3.015	330.5	863.6	1194.1
200	381.79	0.01839	2.288	355.4	843.0	1198.4
250	400.95	0.01865	1.8438	376.0	825.1	1201.1
300	417.33	0.01890	1.5433	393.8	809.0	1202.8
350	431.72	0.01913	1.3260	409.7	794.2	1203.9
400	444.59	0.0193	1.1613	424.0	780.5	1204.5

SG-0004

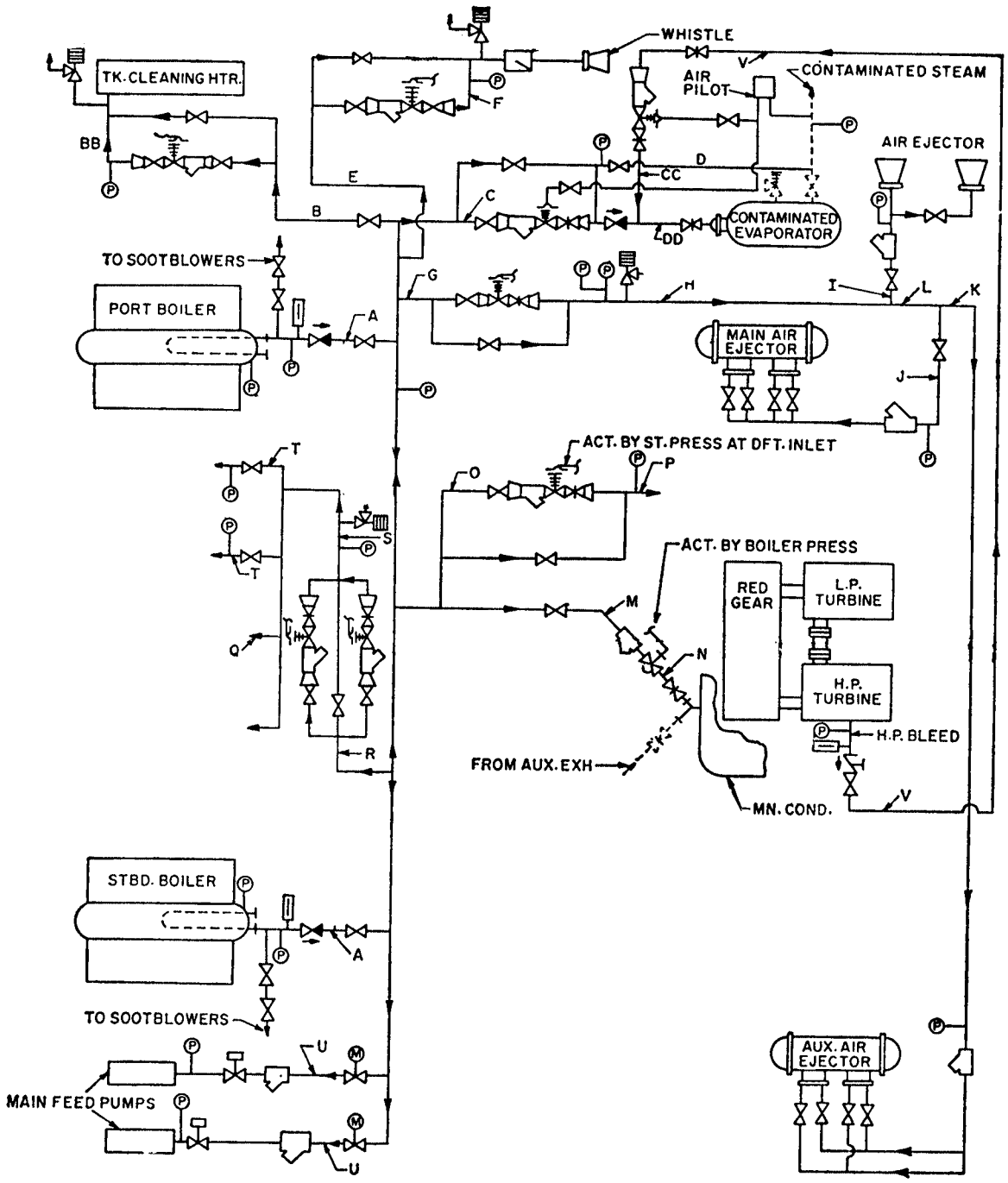

FLOWS AND VELOCITIES						
SYM	IPS	NOM. PRESS PSIG	VEL FT/SEC	FLOW LB/HR	CONDITION	SERVICE
A	4	775	45.7	20000	MAXIMUM	DESUPHTR STM. LOOP
B	2 1/2	850	64.1	12000	RATED	850/130 RED. STA.
BB	5	130	81.8	12000	RATED	850/130 RED. STA. TO TK. CLEANING HEATER
C	2 1/2	850	53.4	10000	RATED	850 PSIG TO CONTAM EVAP RED STA
CC	4	185	42.0	4190	FULL POWER	HP TURBINE BLEED TO CONTAM EVAP.
D	4	130	91.3	8500	RATED	CONTAM EVAP BY-PASS
DD	4	350	42.5	10000	RATED	RED. V. TO CONTAM EVAP
E	1	850	47.2	1500	RATED	850/140 RED. STA.
F	2	140	57.0	1500	RATED	850/140 RED. VALVE TO WHISTLE
G	1 1/2	850	16.2	1260	RATED	850/143 RED. STA.
H	2	143	47.0	1260	RATED	850/143 RED VALVE TO ALL AIR EJECTORS
I	1 1/4	143	47.6	570	RATED	143 PSIG TO DIST PLANT AIR EJECTOR
J	1 1/4	143	41.0	490	RATED	143 PSIG TO MN. AIR EJECTORS
K	1	143	28.9	200	RATED	143 PSIG TO AUX AIR EJECTORS
L	1 1/2	143	42.4	690	RATED	143 PSIG TO MN & AUX. AIR EJECTORS
M	2	850	202	20000	RATED	850 PSIG TO UNLOADING VALVE
N	4	7.8	1302	20000	RATED	UNLOADING VALVE TO UNLOADING HEADER
O	3	850	72.0	21000	ASTERN	850/32 RED. STA.
P	8	32	176	21000	ASTERN	850/32 RED VALVE TO AUX. EXH. SYSTEM
Q	1 1/4	143	78.2	935	RATED	143 PSIG TO GLAND SEAL REGULATOR
R	1 1/2	850	17.4	1355	FULL POWER	850/143 RED. STA.
S	2	143	50.5	1355	FULL POWER	850/143 RED. V. TO GL. SEAL & BURNER ATOM.
T	1 1/4	143	35.1	420	FULL POWER	143 PSIG TO BURNER ATOM. STM.
U	2 1/2	850	58.8	11000	RATED	850 PSIG TO MN FEED PUMP
V	2 1/2	205	101	4190	RATED	HP TURBINE BLEED

SG-0005

SG-0006

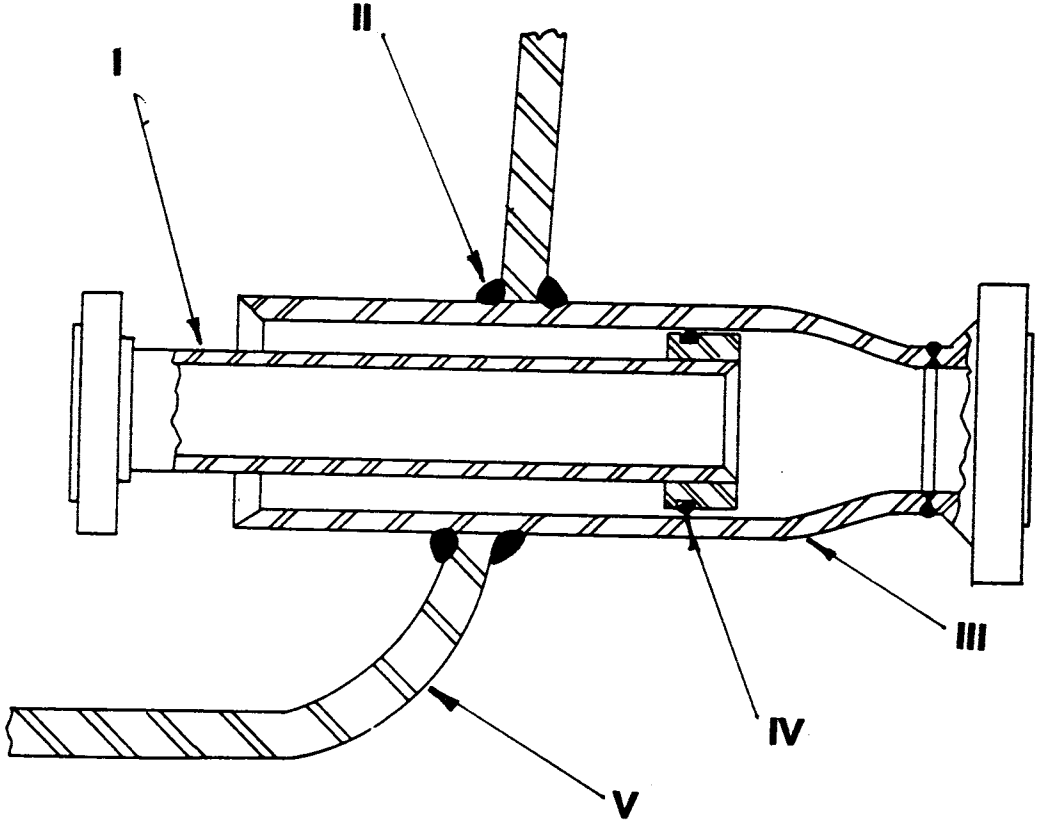

SG-0007

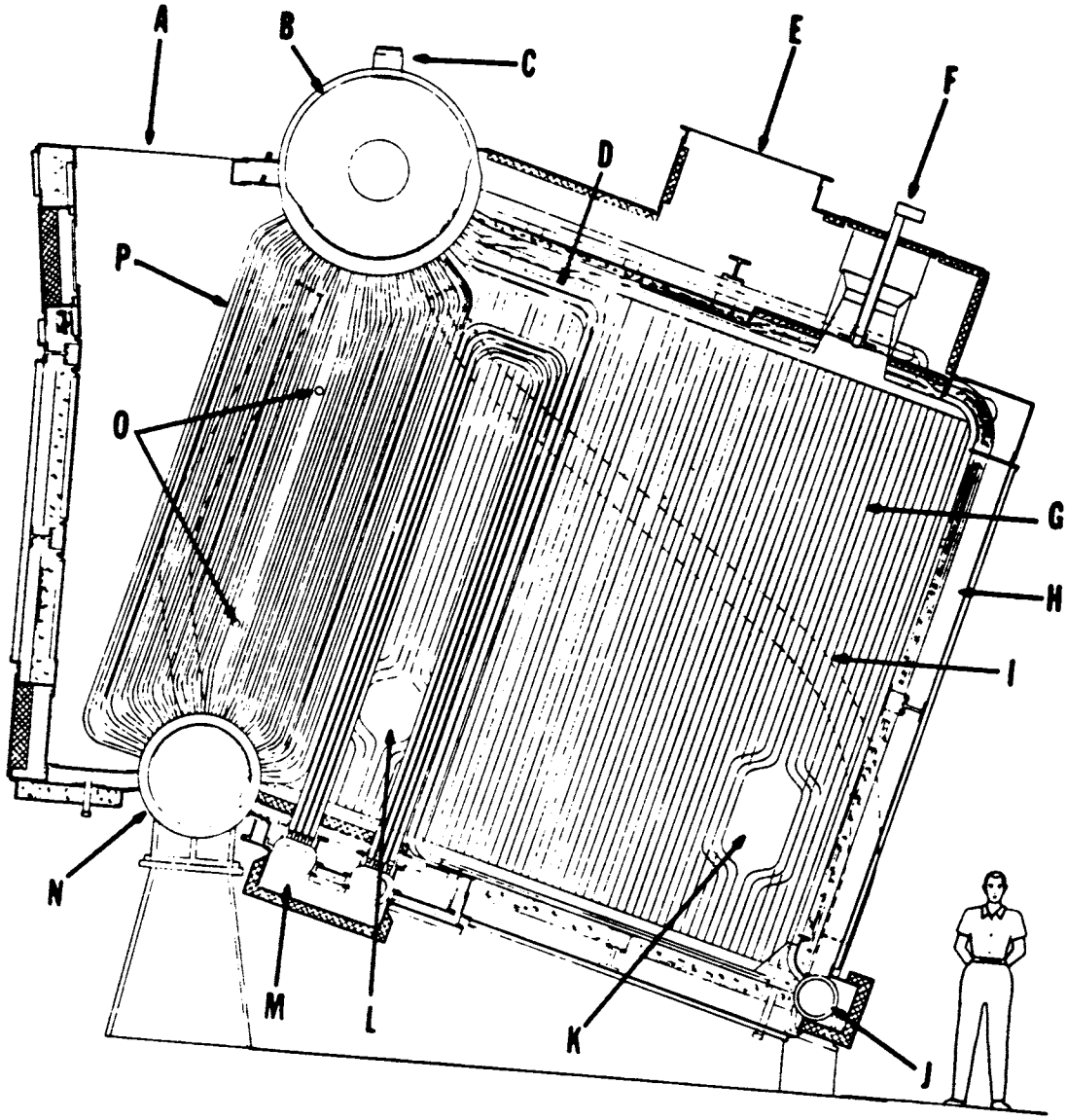

SG-0008

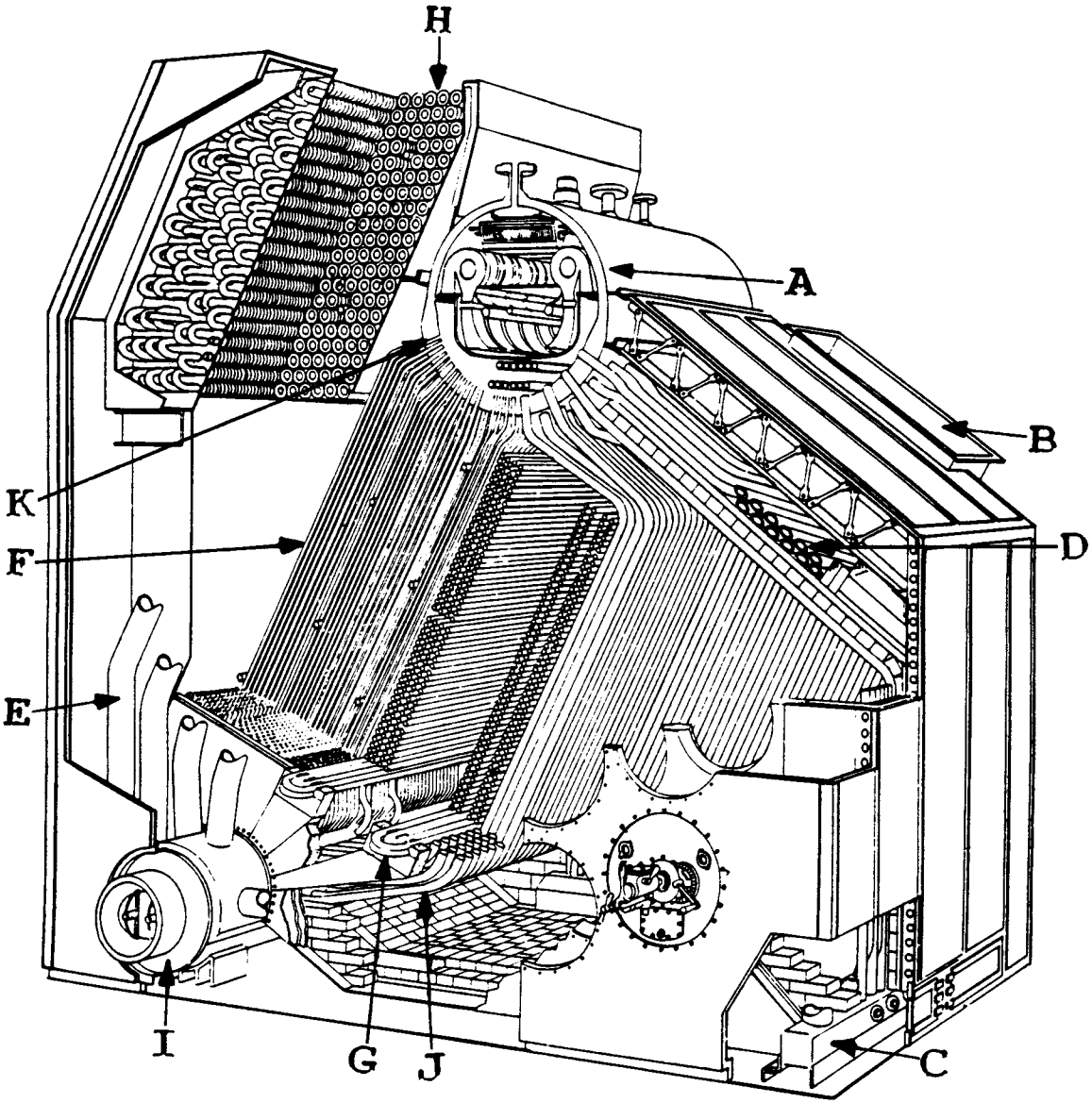

SG-0009

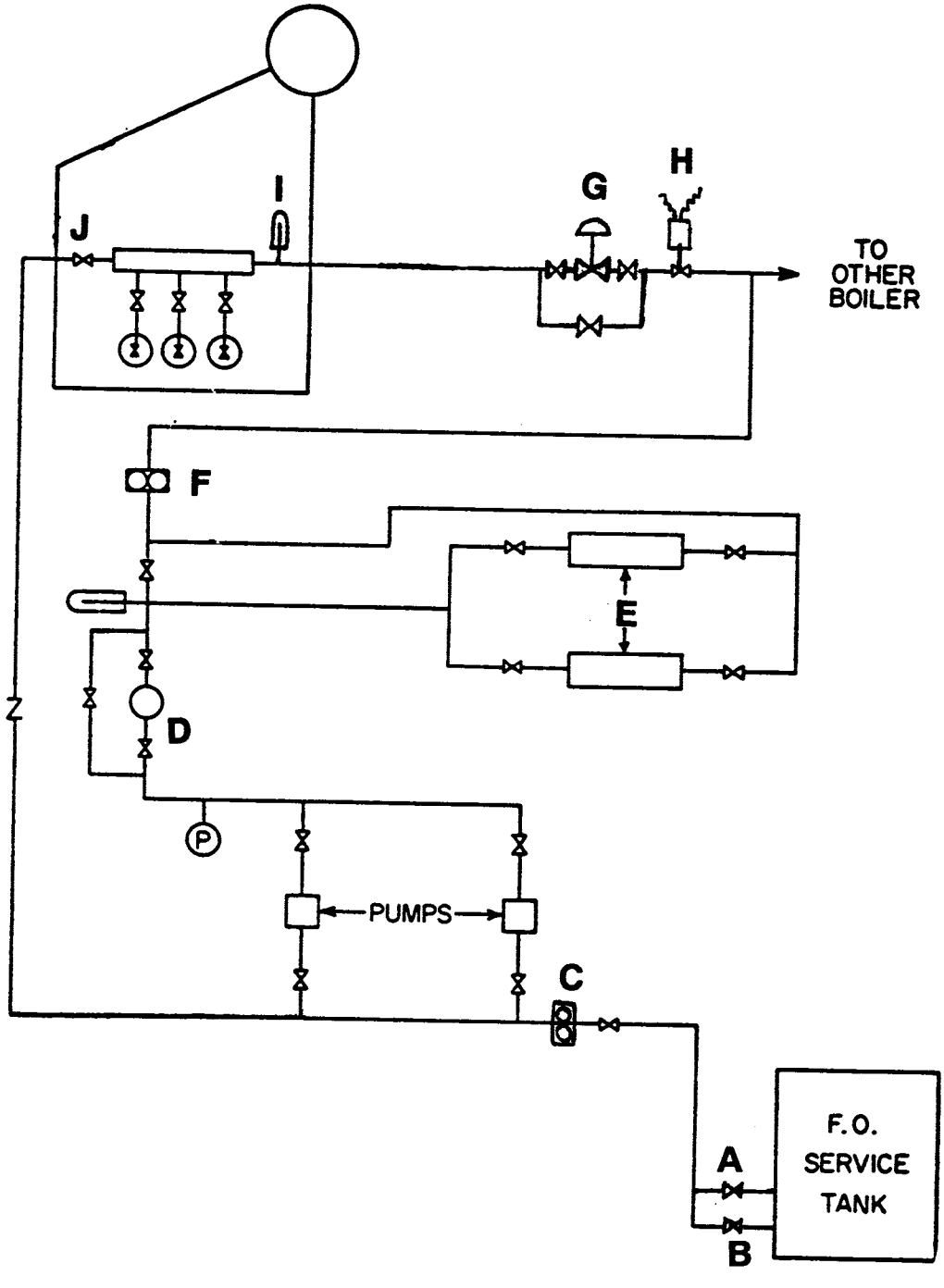

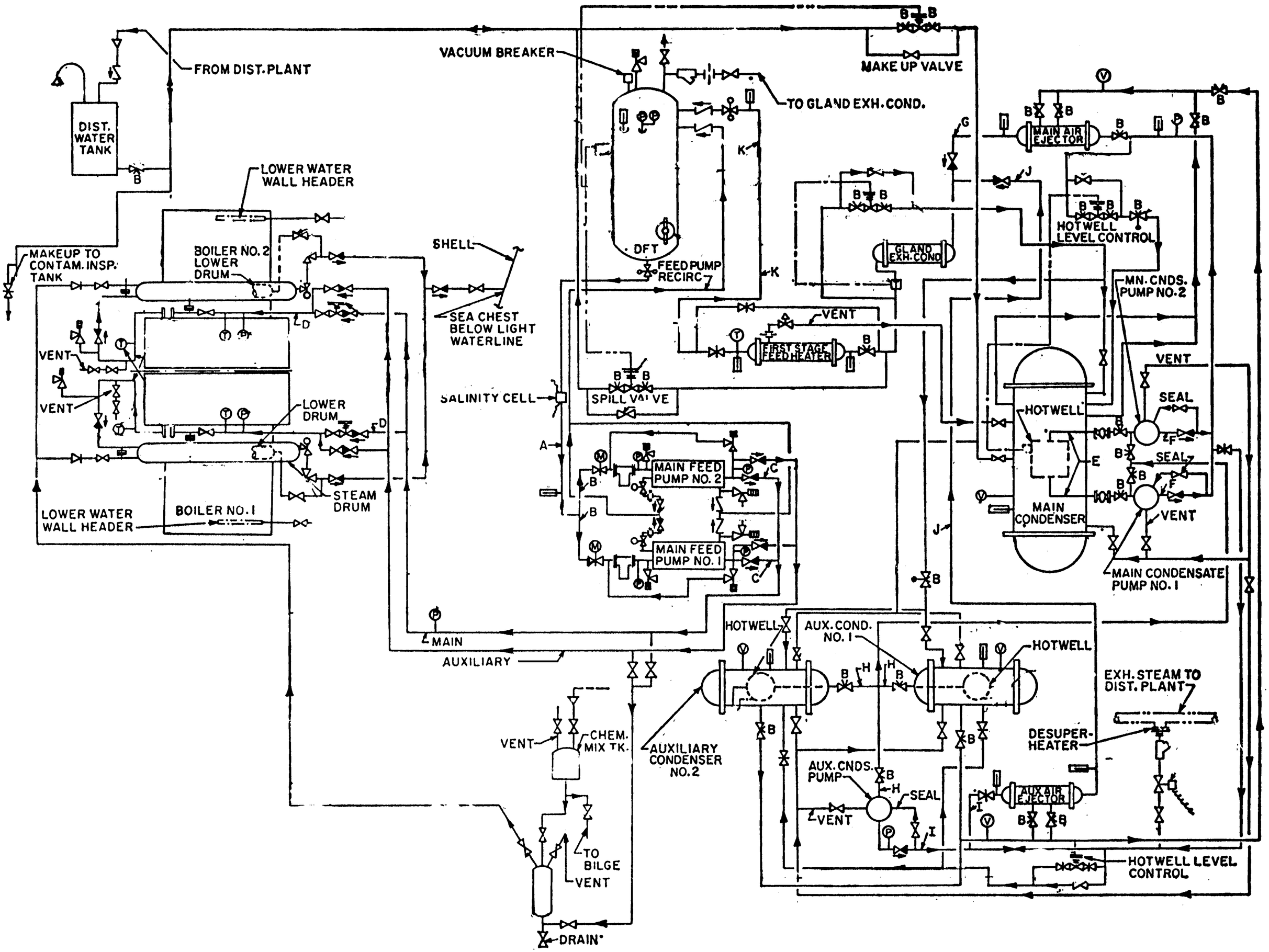
FROM DIST. PLANT
DIST. WATER TANK
VACUUM BREAKER
MAKE UP VALVE
TO GLAND EXH. COND.
LOWER WATER WALL HEADER
MAKEUP TO CONTAM. INSP. TANK
BOILER NO. 2 LOWER DRUM
SHELL
SEA CHEST BELOW LIGHT WATERLINE
VENT
LOWER DRUM
STEAM DRUM
BOILER NO. 1
LOWER WATER WALL HEADER
DFT
FEED PUMP RECIRC
GLAND EXH. COND
FIRST STAGE FEED HEATER
SPILL VALVE
SALINITY CELL
MAIN FEED PUMP NO. 2
MAIN FEED PUMP NO. 1
MAIN AIR EJECTOR
HOTWELL LEVEL CONTROL
MN. CNDS. PUMP NO. 2
SEAL
HOTWELL
MAIN CONDENSER
MAIN CONDENSATE PUMP NO. 1
MAIN
AUXILIARY
AUX. COND. NO. 1
EXH. STEAM TO DIST. PLANT
DESUPER-HEATER
CHEM. MIX TK.
AUXILIARY CONDENSER NO. 2
AUX. CNDS. PUMP
AUX. AIR EJECTOR
TO BILGE
DRAIN

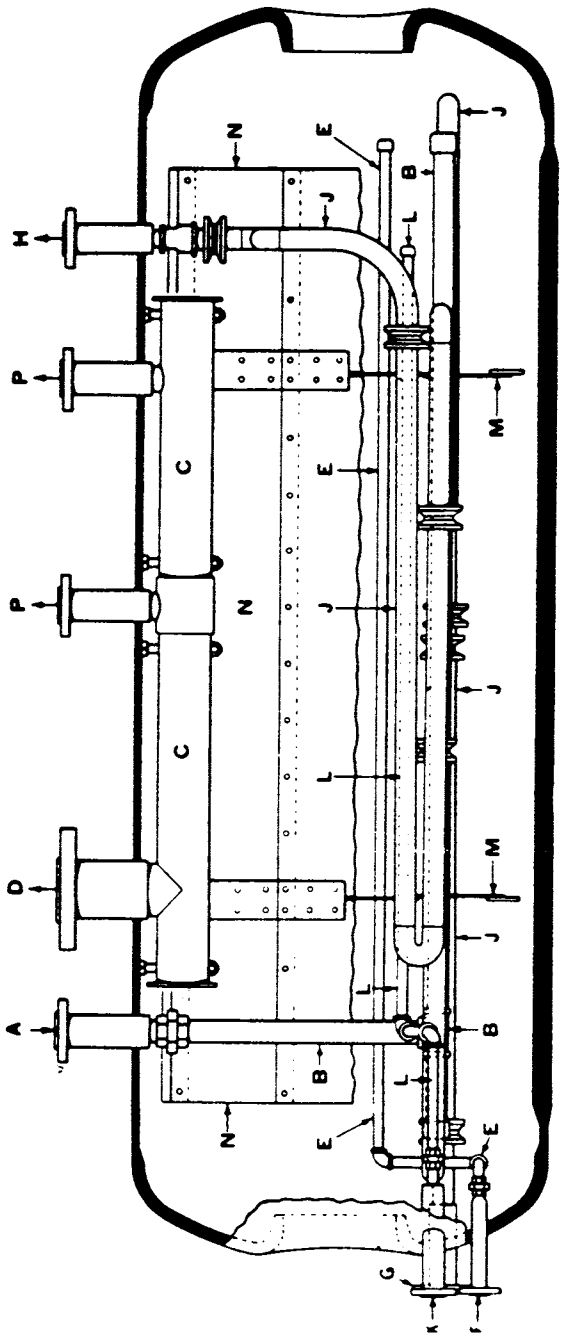

LONGITUDINAL SECTIONAL ELEVATION

SG-0012

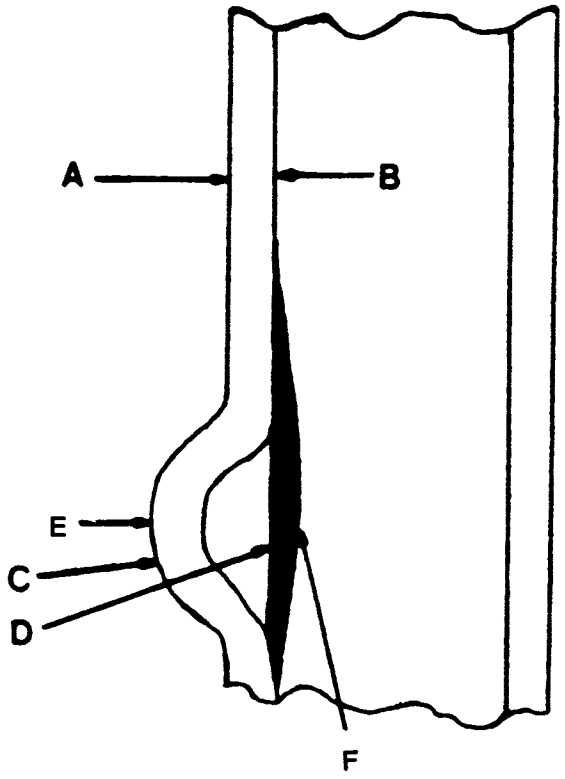

SG-0013

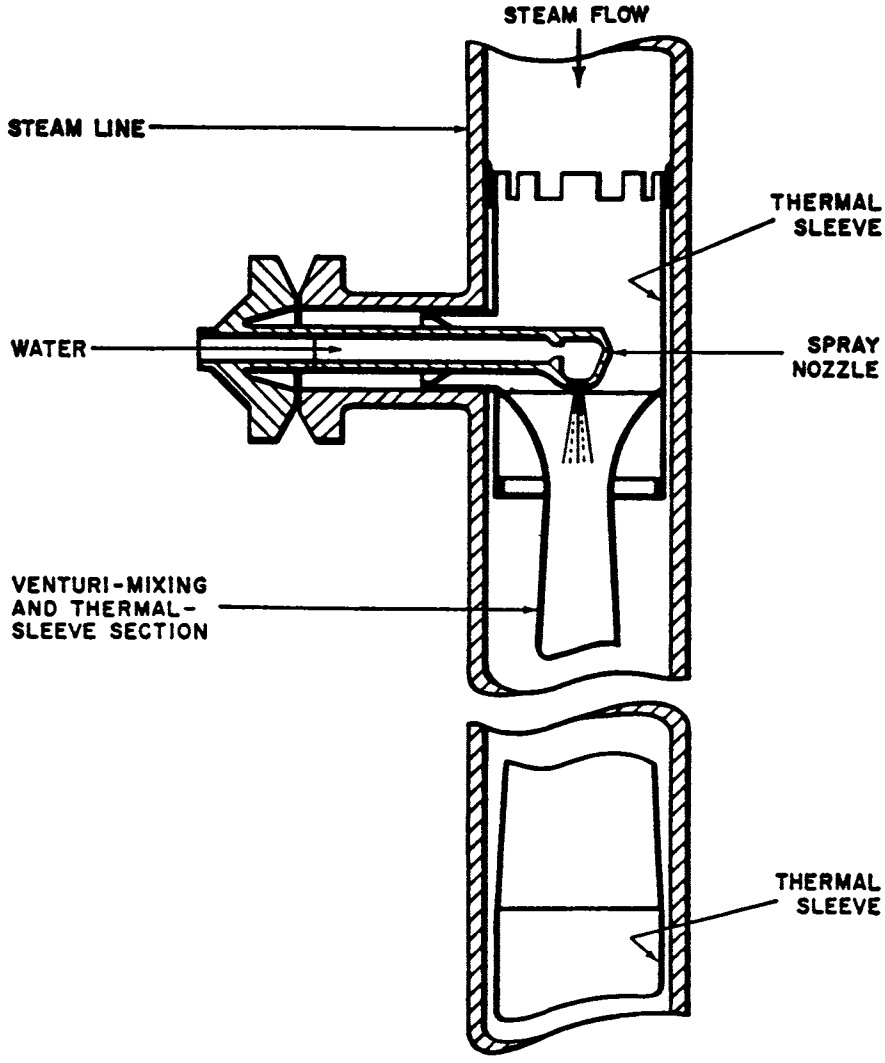
STEAM FLOW
STEAM LINE
THERMAL SLEEVE
WATER
SPRAY NOZZLE
VENTURI-MIXING AND THERMAL-SLEEVE SECTION
THERMAL SLEEVE

SG-0014

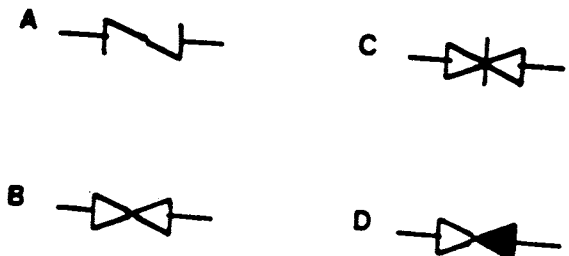

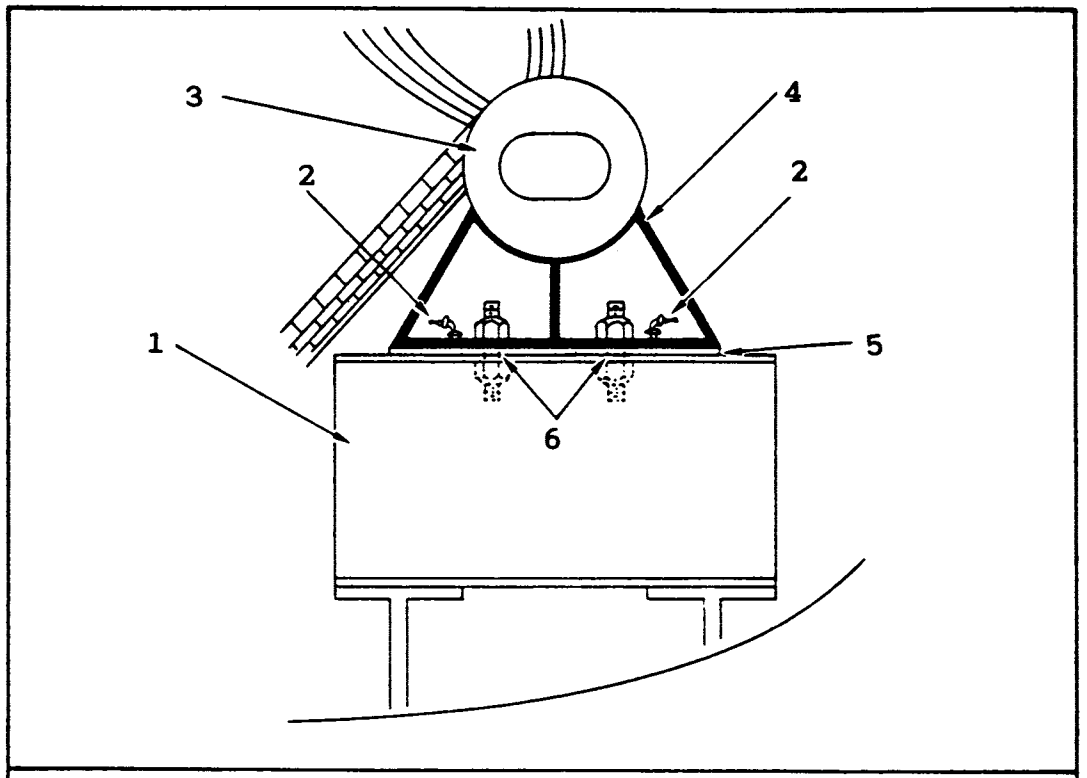
3
4
2
2
1
5
6

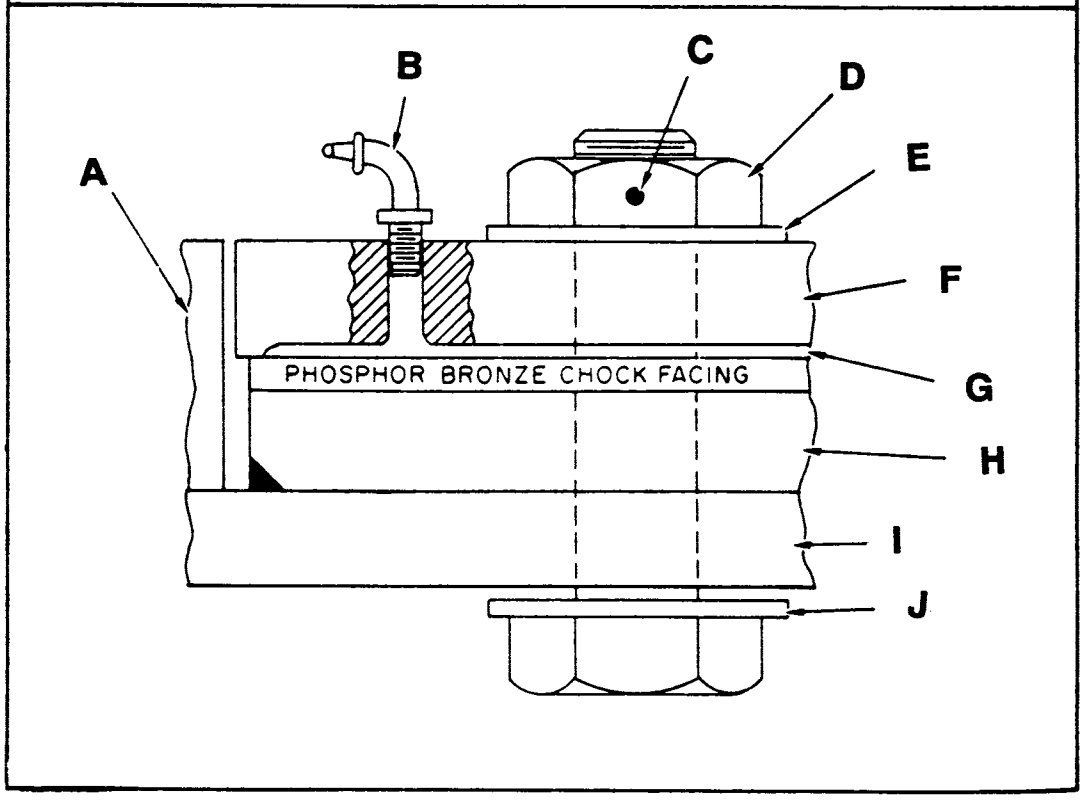
B
C
D
A
E
F
PHOSPHOR BRONZE CHOCK FACING
G
H
I
J

SG-0016

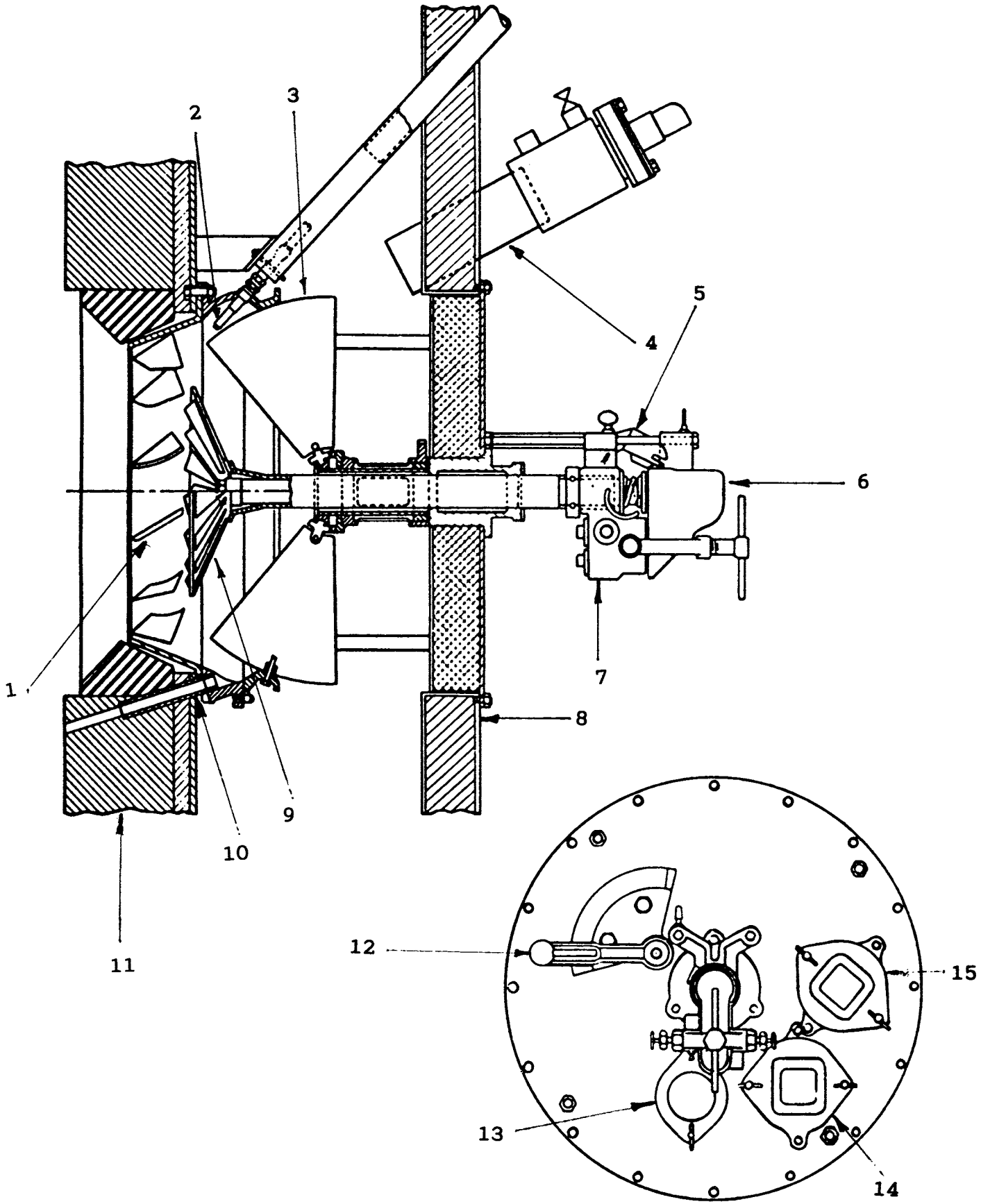

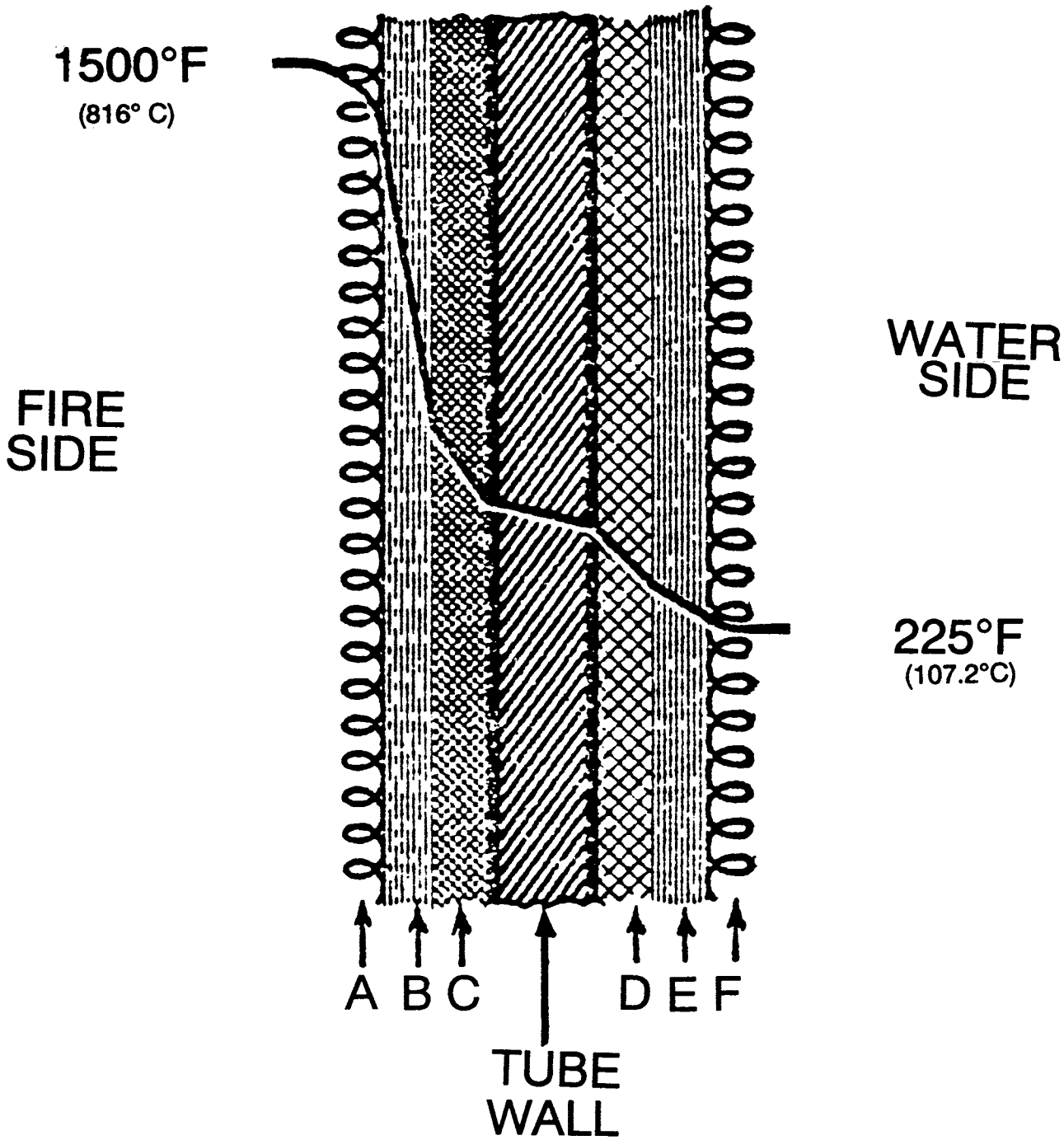
1500°F
(816° C)
FIRE SIDE
WATER SIDE
225°F
(107.2°C)
A B C
D E F
TUBE WALL

SG-0018

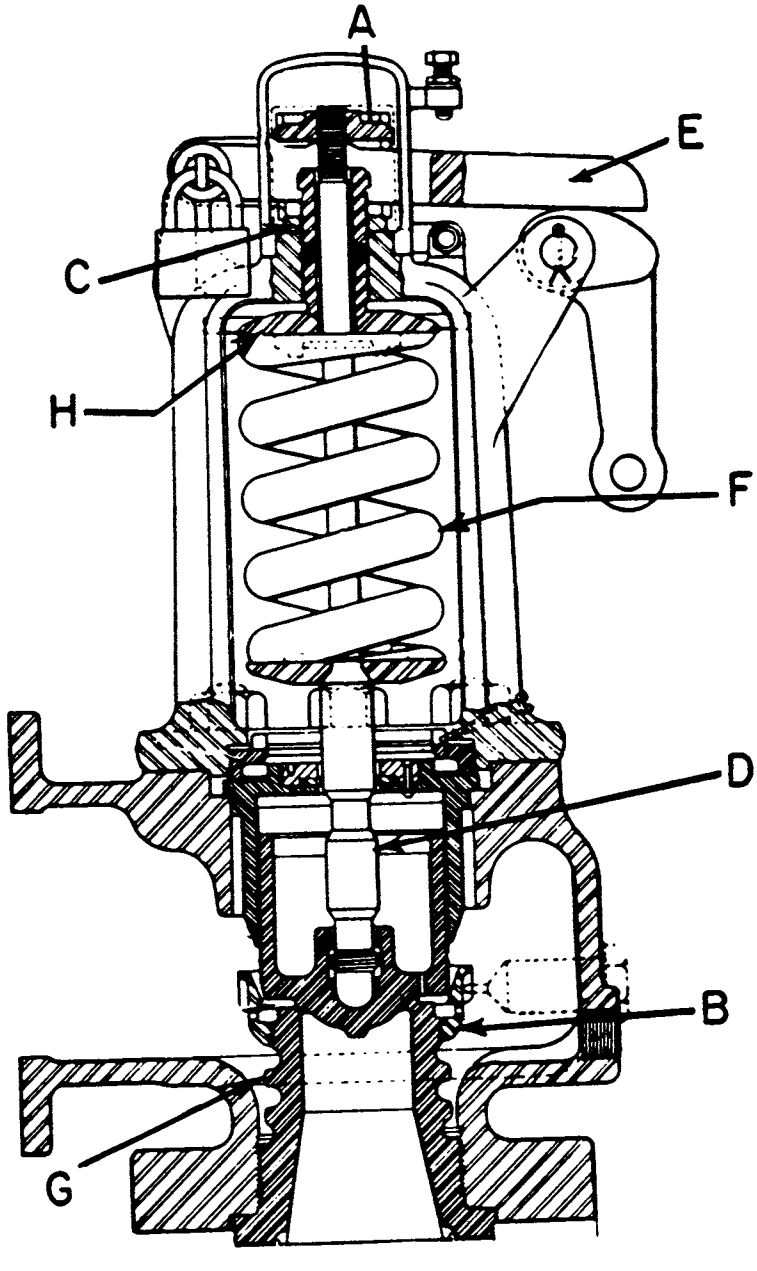

SG-0019

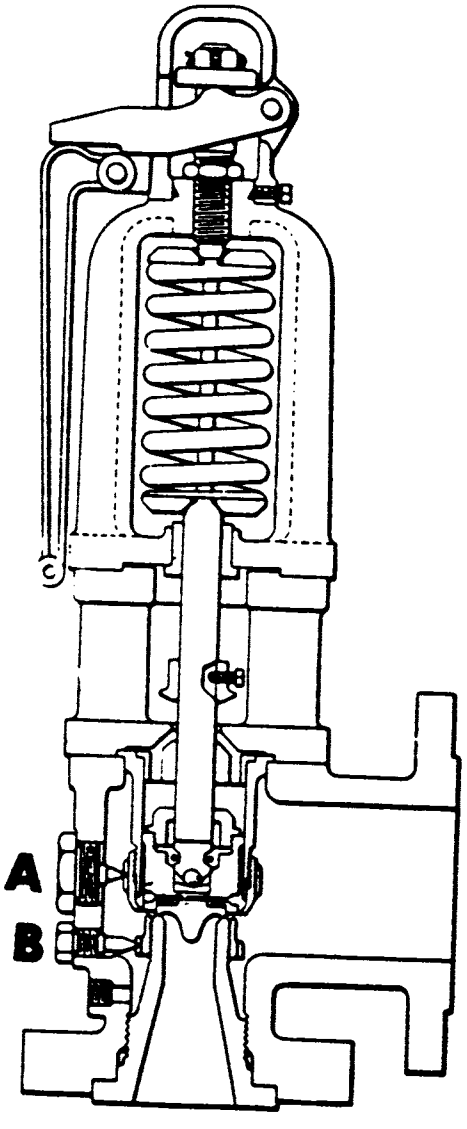

SG-0020

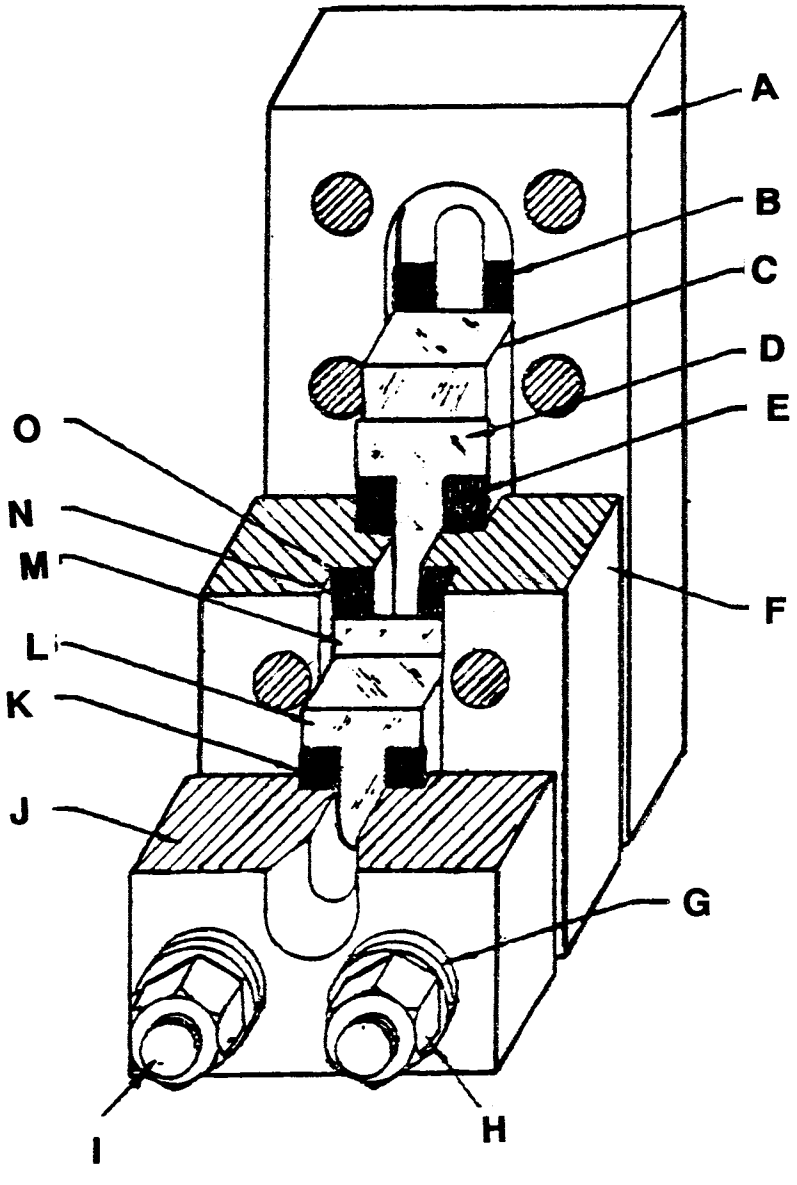

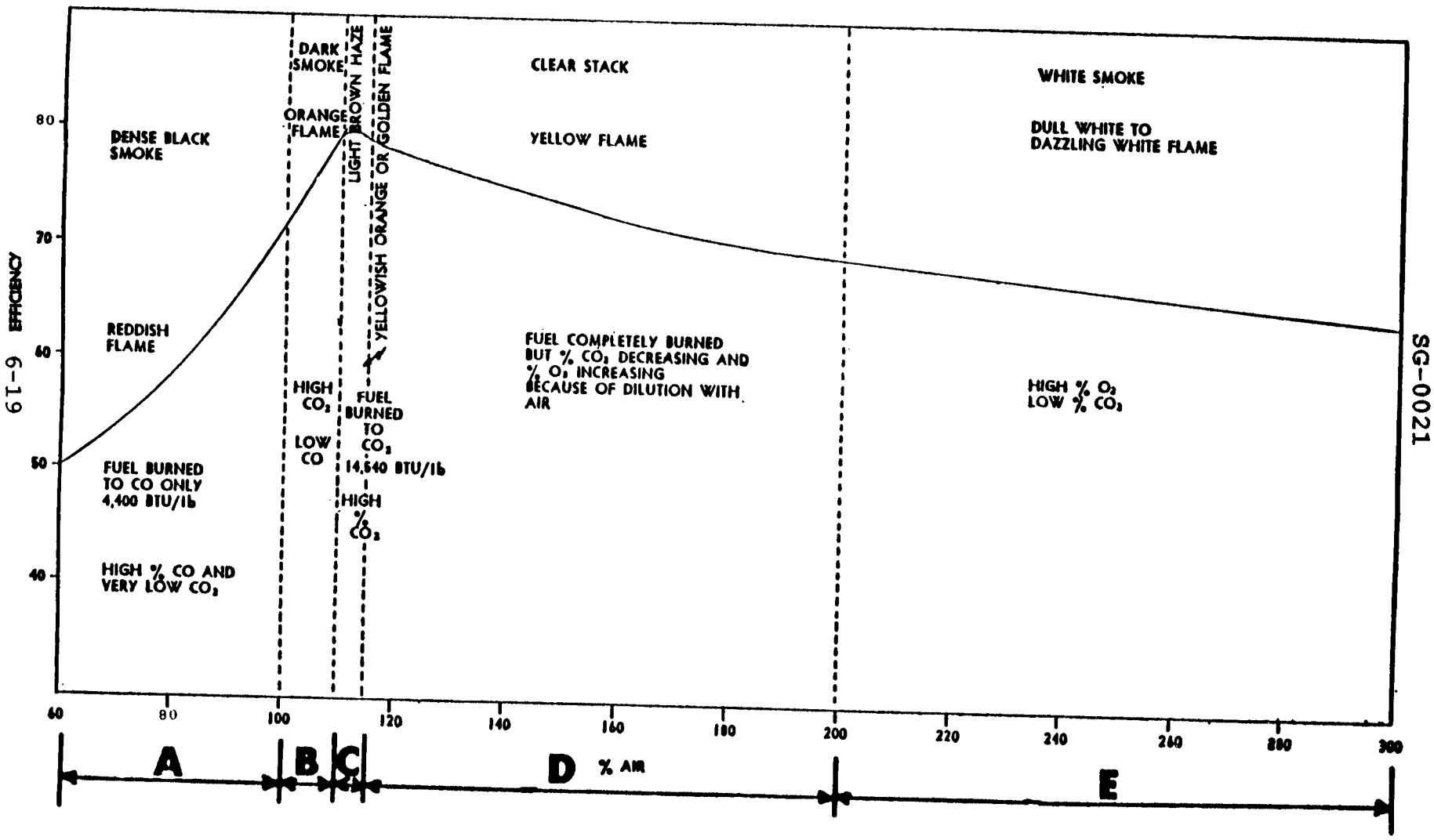
EFFICIENCY
80
70
60
50
40
DENSE BLACK SMOKE
REDDISH FLAME
FUEL BURNED TO CO ONLY 4,400 BTU/lb
HIGH % CO AND VERY LOW CO_2
DARK SMOKE
ORANGE FLAME
HIGH CO_2
LOW CO
LIGHT BROWN HAZE
YELLOWISH ORANGE OR GOLDEN FLAME
FUEL BURNED TO CO_2 14,540 BTU/lb
HIGH % CO_2
CLEAR STACK
YELLOW FLAME
FUEL COMPLETELY BURNED BUT % CO_2 DECREASING AND % O_2 INCREASING BECAUSE OF DILUTION WITH AIR
WHITE SMOKE
DULL WHITE TO DAZZLING WHITE FLAME
HIGH % O_2
LOW % CO_2
60
80
100
120
140
160
180
200
220
240
260
280
300
% AIR
A
B
C
D
E

SG-0021

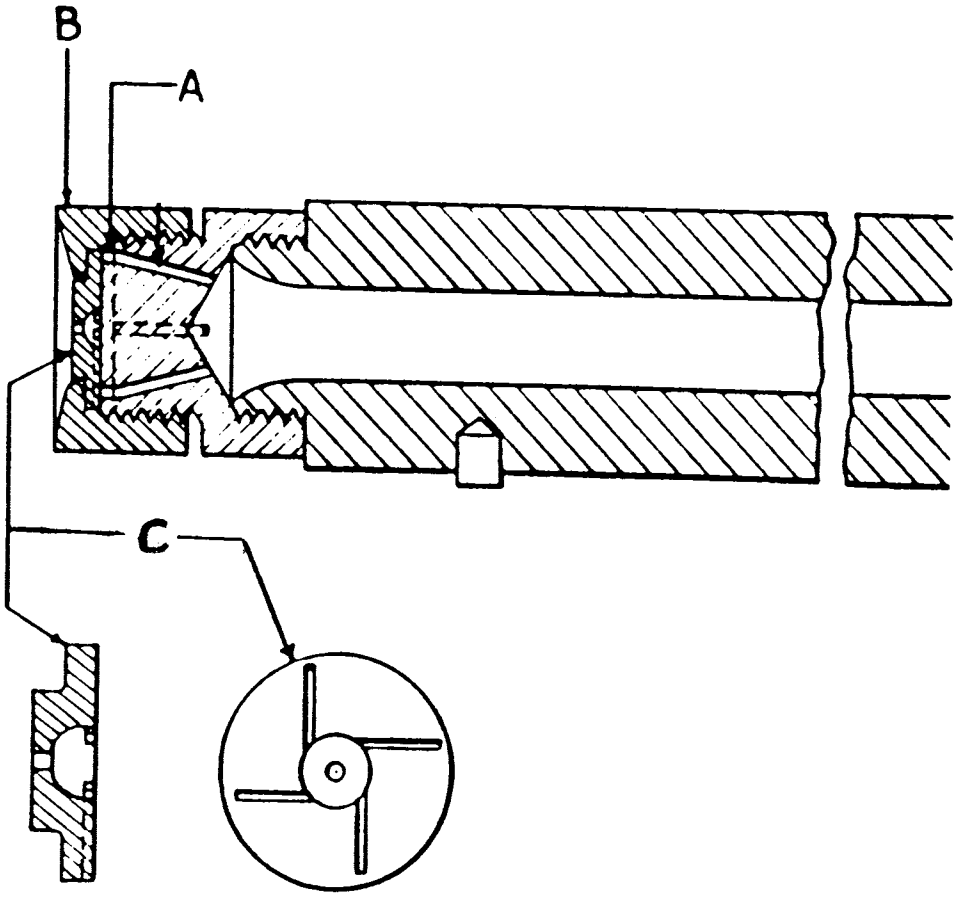

38T08

SG-0023

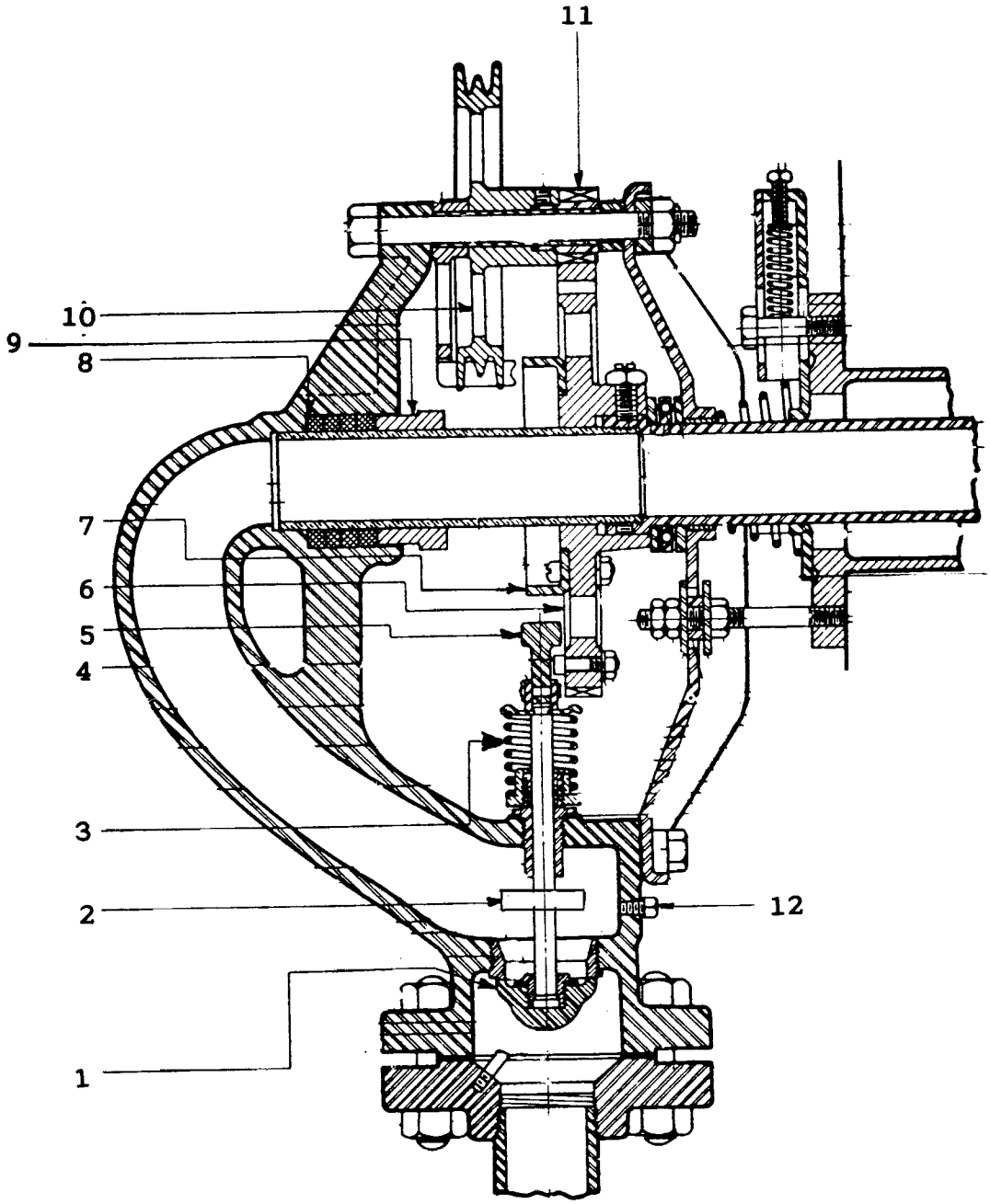

SG-0024

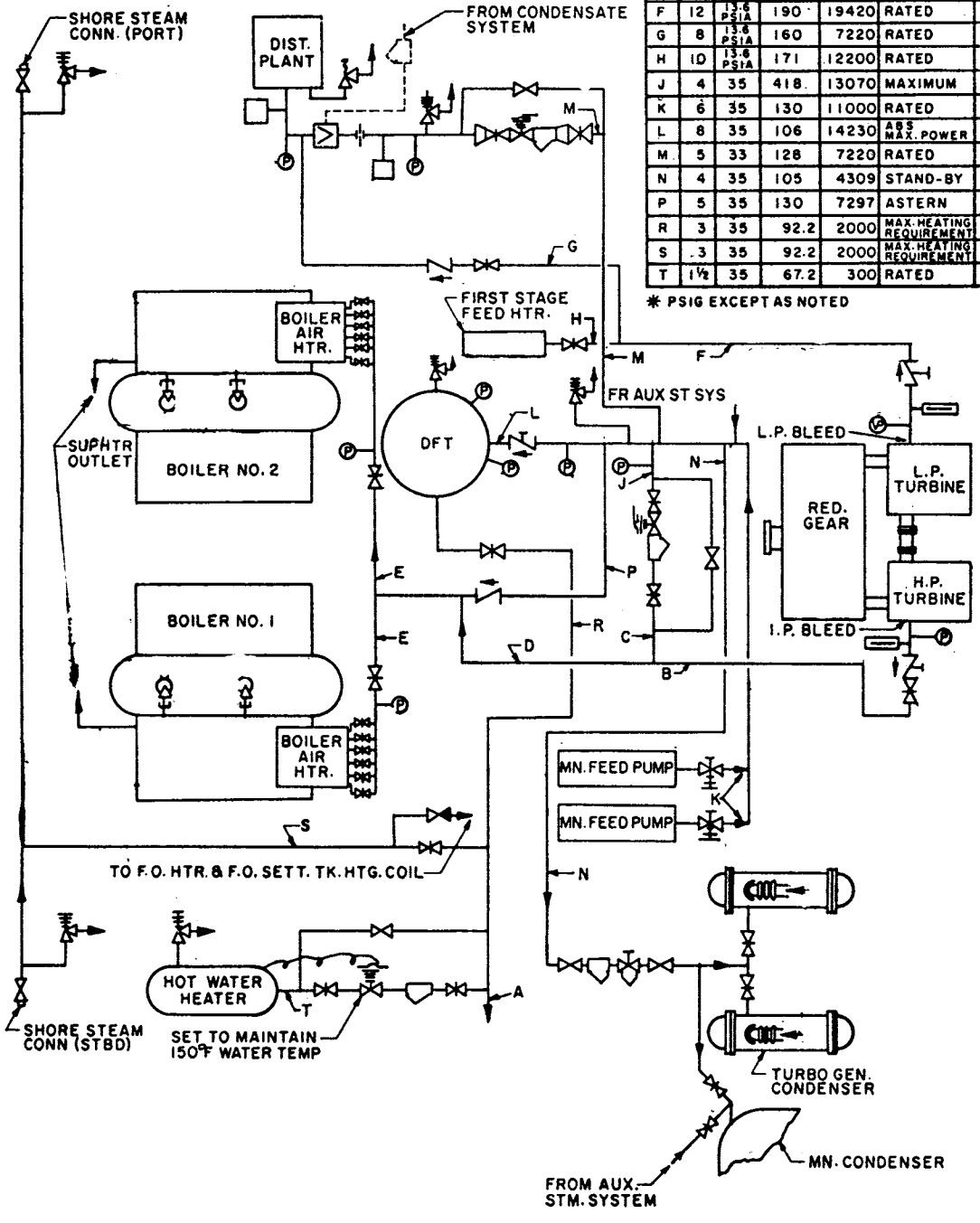

FLOWS AND VELOCITIES						
SYM	SIZE IN.	NOMIN PRESS	VEL. FT/SEC	FLOW LB/HR	CONDITION	SERVICE
A	3	35	78.2	1700	MAX HEATING REQUIREMENT	STM. TO GALLEY, LAV. & SHIP HEATING
B	6	67	203	22610	MAXIMUM	I P TURBINE BLEED
C	4	67	267	13070	MAXIMUM	I P BLEED TO EXH. MN.
D	5	67	124	9540	ABS MAX. POWER	2 BOILER-AIR HEATERS
E	3½	67	125	4770	ABS MAX. POWER	1 BOILER-AIR HEATER
F	12	13.6 PSIA	190	19420	RATED	L.P. TURBINE BLEED
G	8	13.6 PSIA	160	7220	RATED	L.P. BLEED TO DISTIL. PLANT
H	10	13.6 PSIA	171	12200	RATED	L.P. BLEED TO FIRST STAGE FEED HEATER
J	4	35	418	13070	MAXIMUM	I P BLEED TO EXH. MN.
K	6	35	130	11000	RATED	EXH.-1 MN. FD. PUMP
L	8	35	106	14230	ABS MAX. POWER	EXH. TO DFT
M	5	33	128	7220	RATED	EXH. TO DISTL. PLANT
N	4	35	105	4309	STAND-BY	EXH. UNLOAD TO DUMP VALVE
P	5	35	130	7297	ASTERN	EMER. EXH. TO BLR. AIR HEATERS.
R	3	35	92.2	2000	MAX. HEATING REQUIREMENT	STM. TO H.W. HTR. GALLEY, LAV. & SHIP HEATING
S	3	35	92.2	2000	MAX. HEATING REQUIREMENT	SHORE STM. TO H.W. HTR. GALLEY, LAV. & SHIP HTG.
T	1½	35	67.2	300	RATED	STM. TO H.W. HEATER

* PSIG EXCEPT AS NOTED

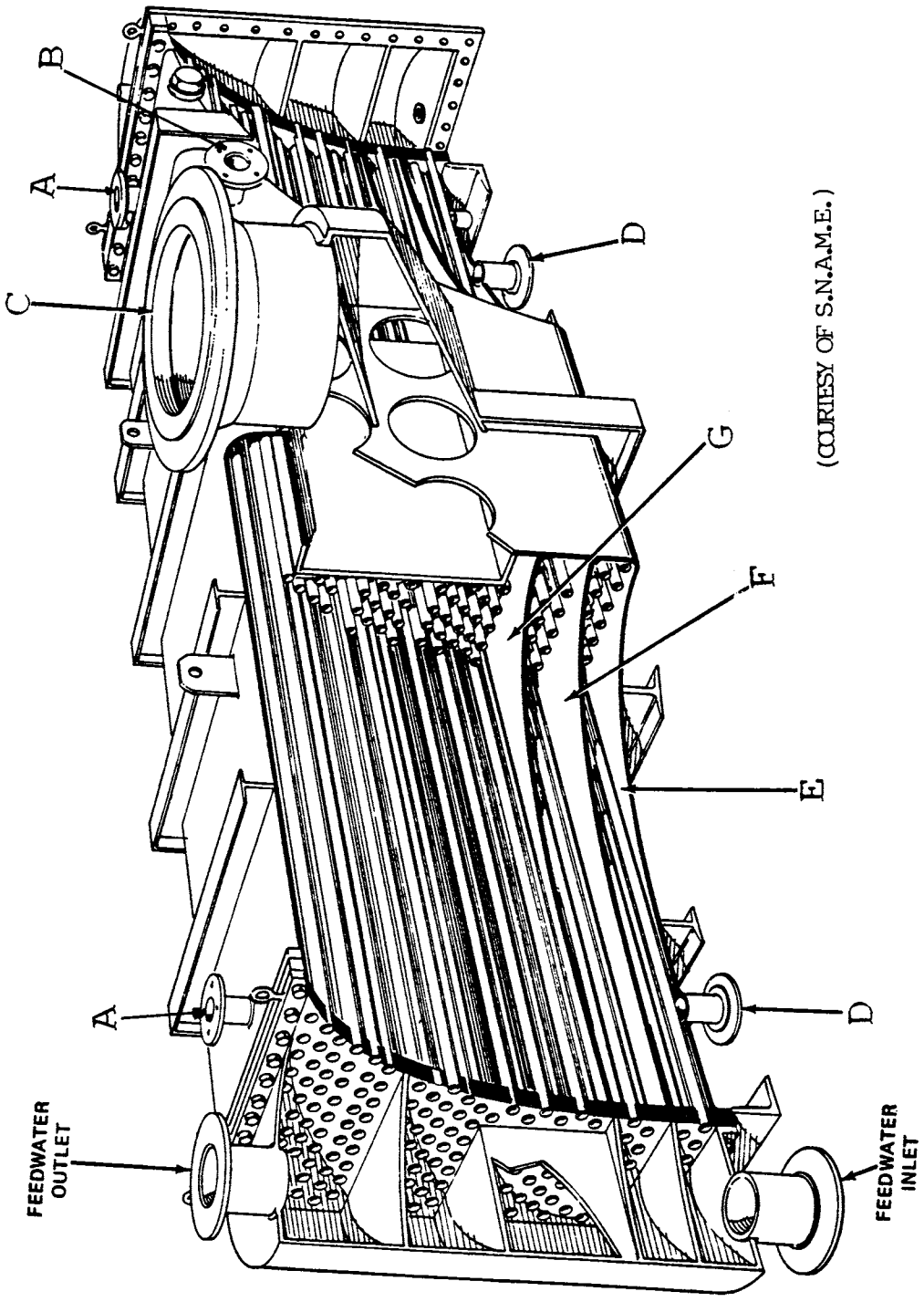

(COURTESY OF S.N.A.M.E.)

-Properties of Saturated Steam

Absolute Pressure			Temperature	
Lb. per Sq. In.	Inches of Hg	Vacuum Inches of Hg Gage	°C	°F
0.20	0.41	29.51	11.74	53.14
0.25	0.51	29.41	15.17	59.30
0.30	0.61	29.31	18.04	64.47
0.35	0.71	29.21	20.52	68.93
0.40	0.81	29.11	22.70	72.86
0.45	0.92	29.00	24.66	76.38
0.50	1.02	28.90	26.43	79.58
0.60	1.22	28.70	29.56	85.21
0.70	1.43	28.49	32.27	90.08
0.80	1.63	28.29	34.66	94.38
0.90	1.83	28.09	36.80	98.24
1.0	2.04	27.88	38.74	101.74
1.2	2.44	27.48	42.18	107.92
1.4	2.85	27.06	45.14	113.26
1.6	3.26	26.66	47.77	117.99
1.8	3.66	26.26	50.13	122.23
2.0	4.07	25.85	52.27	126.08
2.2	4.48	25.44	54.23	129.62
2.4	4.89	25.03	56.05	132.89
2.6	5.29	24.63	57.74	135.94
2.8	5.70	24.22	59.33	138.79
3.0	6.11	23.81	60.82	141.48
3.5	7.13	22.79	64.21	147.57
4.0	8.14	21.78	67.21	152.97
4.5	9.16	20.76	69.91	157.83
5.0	10.18	19.74	72.36	162.24
5.5	11.20	18.72	74.61	166.30
6.0	12.22	17.70	76.70	170.06
6.5	13.23	16.69	78.64	173.56
7.0	14.25	15.67	80.47	176.85
7.5	15.27	14.65	80.52	176.94
8.0	16.29	13.63	83.81	182.86
8.5	17.31	12.61	85.36	185.64
9.0	18.32	11.60	86.82	188.28
9.5	19.34	10.58	88.22	190.80
10.0	20.36	9.56	89.57	193.21
11.0	22.40	7.52	92.08	197.75
12.0	24.43	5.49	94.42	201.96
13.0	26.47	3.45	96.60	205.88
14.0	28.50	1.42	98.64	209.56